SONIT PP20

A C O U S T I C B O A R D S

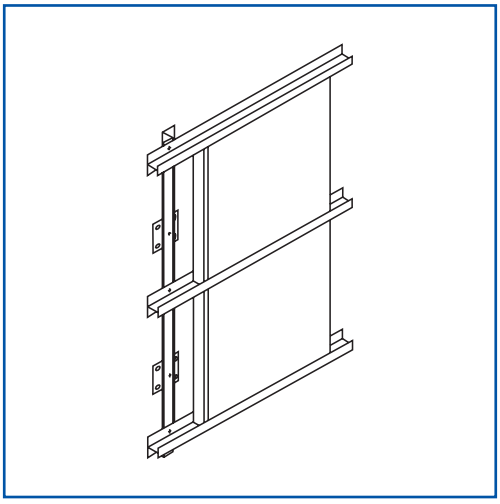

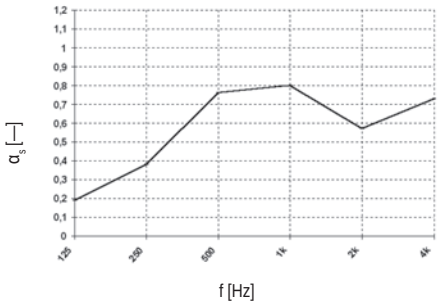

SONIT PP20 with protective spray coat with 30 mm air gap.

DESCRIPTION

Absorbing wall lining for internal and external application with natural stone effect. The material is non-flammable, clean for ecology (without fibres) and with good mechanic, climatic and chemical resistance.

SHAPE: Rectangular plates of various dimensions with plane face and bevelled corners. Two opposite sides of some dimensions have a slot to install into the framework.

MATERIAL: Sized coloured sand, bound with use of epoxide composition. For need of external application, the face of wall lining is provided with silicone enamel protection coat.

DIMENSIONS: 900 × 1000 × 18 mm, 950 × 1000 × 18 mm, 650 × 1300 × 20 mm with the slot.

WEIGHT: 30 kg/m^2

COLOURS AND SURFACE FINISH: Natural stone grading, for interior – single-coloured and pepper-and-salt; for exterior – single-coloured with wide colour scale, according to the samplers.

ACOUSTICS:

- acoustic absorption on middle and high frequencies
- NRC = 0,60
- α_W = 0,55 (M,H) – applies for air gap 30 mm
- air soundproof index: R_W = 13 dB

OTHER FEATURES:

- bulk density: 1575 kg/m^3
- compression strength: 12 MPa
- inflammability: A – non-flammable
  A2-s2,d0 according to ČSN EN 13 501-1:2003
- weather resistance: -30 to + 60°C, frostproof (50 cycles)
- thermal conductivity coefficient: 0,717 Wm^{-1}K^{-1}
- hygiene: does not contain mineral fibres and heavy metals, certified for usage in health services and food industry
- chemical resistance: withstands diluted solutions of lyes and acids, oil products, chemical defrosting agents

APPLICATION

Acoustical treatment of industrial plants and community rooms, acoustic treatment of exteriors (suitable for noise barriers in combination with air soundproof material).

INSTALLATION

The lining elements are installed on the wall with air cavity on the metal framework, that has surface finish of ground coat or zinc plated. Area between frame and the wall can be used for technologic distribution. Elements can also be installed into special panels determined for noise barrier construction. The lining can be dry cut to required dimension with use of diamond-charged grinding wheel or disk sander. Holes in lining (e.g. sockets and switches) can be drilled with heavy metal tools.

MAINTENANCE

Dust on the lining can be cleaned with vacuum cleaner. In case of hard impurity use a solution of universal detergent in hot water and apply it with brush. Impurities from oil products can be cleaned with solvent.

PACKING

24 pieces on the pallet.

www.soning.cz

SONING Praha a.s., Plzeňská 66, 151 24 Praha 5
tel.: +420 257 190 511-512, fax: +420 257 329 512, e-mail: soning@soning.cz